DS-VA-MT3750C-eng
January, 2017

Data Sheet

MT3750C Series

MT3750C Series

Variable Area

Metal Tube Variable Area Flowmeters

Overview

Brooks® MT3750 meter operation is based on the variable area principle. The all metal meter is ideal for a variety of gas and liquid applications. These meters are indispensable where high pressure operating conditions exist.

The primary meter is available in 316L stainless steel construction. But corrosion resistant materials of construction are available which makes it a perfect fit for the metering of aggressive applications.

A broad range of threaded connection sizes and types provide for flexible installations.

The very popular mechanical indicator option does not require power which reduces installation costs and is a cost-effective solution for flow measurement in hazardous areas. Certified transmitters and alarms both flameproof and instrinsically safe are available for hazardous installations anywhere in the world.

Product Description

The Brooks® Ar-Mite™ is a reliable, low flow metal tube flowmeter with 316L stainless steel wetted parts. The magnetically coupled indicator provides a highly reliable method of indication. This model is a practical and economical approach to low flow rate indication for high pressure and difficult to handle fluids.
Optional accessories include 4-20 mA output, Needle Valve, Flow Controllers and Alarms.

Features and Benefits

Features	Benefits
Wetted Parts made from Stainless Steel or Monel®	Compatible for a wide range of fluids (liquids or gases)
Ranges up to 100 l/h or 26 GPH	Capable of measuring (very) low flows accurately
High Pressure and Temperature Rating	Designed to work safely under difficult conditions
Miniature Size	Compact even with process flanges
Local Reading, Integral Control Valve,	Needle Valve, Transmitter or Alarms, versatile product offering
Certified Ex-proof, Intrinsically safe	ATEX, CSA, IECEx and NEPSI Approved

BROOKS® INSTRUMENT

Product Specifications / Capacities

Table 1 MT3750C Specifications

Specifications	MT3750C
Measuring Range	See Capacities Table 2
Rangeability	10:1 (most sizes)
Metering Tube	316L (stainless steel)
	Monel K-500
End Fittings	316L (stainless steel)
	Monel K-500
Accuracy	5%, 3%, VDI/VDE class 4, 2.5
Repeatability	1% Full Scale
Scale	Silver increments with black background - Aluminum Material (52 mm long), single or dual
Connections	1/4" to 3/4"NPT Female
	1/4", 6 mm tube compression
Floats	316L stainless steel
	Titanium Gr. II
O-rings	Viton® fluoroelastomers
	PTFE Teflon®, Buna-N, Kalrez® 4079 perfluoroelastomers, Ethylene Propylene
Protection Category	(Indicator only) IP64/NEMA 4X, (Alarms) IP65/NEMA 4X, (Transmitter) IP66/67/NEMA 4X
Indicator Housing & Cover	Die cast Aluminum (Alloy 380), epoxy paint, glass window
Maximum Fluid Temperature	204°C/400°F (Refer to tables on Page 3)
Maximum Fluid Pressure	1500 PSIG (100 Bar)
	4000 PSIG (276 Bar) (No valve, 1/4" NPT only)
Meter Dimensions	Refer to Figures on Pages 4, 5 and 6
Model Code	Refer to Pages 10, 11 & 12
Pressure Equipment Directive (PED) 97/23/EC	Flowmeter complies under Sound Engineering Practices (SEP)
Inductive Alarm Switches	1 or 2 inductive switches
Reed Switches	1 or 2 switches
Transmitter	4-20 mA output
Agency Approvals	Refer to Tables 6-9
Optional Equipment	Cartridge or NRS™ valves
	Integrally mounted flow controllers

Table 2 MT3750C Capacities

Meter Size	Flow Range					Viscosity Limit (3)	Pressure Drop	
	Water		Air (1, 2)					
	gph	l/h	ln/h	scfh	m^3n/h	CP	mBar	Inches WC
0	0.021-0.21	0.08-0.8	3.9-39	0.15-1.5	-	5	12	4.8
1	0.034-0.34	0.13-1.3	5.6-56	0.21-2.1	-	10	12	4.8
2	0.95-0.95	0.36-3.6	13.0-120	0.5-4.9	-	20	12	4.8
3	0.29-2.8	1.0-10	-	1.2-12	0.033-0.33	35	12	4.8
4	0.55-5.5	2.1-21	-	2.5-23	0.063-0.62	70	32	12.8
5	1.1-11	4.2-42	-	5.4-53	0.15-1.3	100	38	15.3
6	2.8-26	11-100	-	12-110	0.31-3.1	130	44	17.7

Notes:

1. Air flows in scfh converted to 70°F and 14.7 psia when the meter is operated at 70°F and 14.7 psia.
2. Air flows in m^3n/h (converted to normal conditions: 0° and 1.013 bar abs) when the meter is operated at 1.013 bar abs and 20°C.
3. When the viscosity of the fluid exceeds the viscosity immunity ceiling (VIC), a calculated correction is applied to account for the difference between factory calibration fluid and process fluid.

Product Specifications - Pressure / Temperature and Certifications

Table 3 MT3750C Pressure Ratings in PSIG (BarG)

Meter Type	Pressure Rating -58°F to 400°F / -50°C to 204°C
Standard Meter	1500 (100)
High Pressure Meter	4000 (276)

Table 4 MT3750C Fluid Temperature at Ambient Temperature

Max. Ambient Temperature		Max. Fluid Temperature per Option					
		Indicator		Alarm		Transmitter	
°F	°C	°F	°C	°F	°C	°F	°C
-58	-50	-58 to 400	-50 to 204	N/A	N/A	N/A	N/A
-20	-29	400	204	-20 to 250	-29 to 120	-20 to 180	-29 to 82
104	40	400	204	250	120	180	82
110	43	390	199	250	120	175	79
120	49	380	193	250	120	170	76
130	54	370	187	250	120	165	74
140	60	360	182	240	115	155	68
150	65	350	176	235	112	150	65

Notes:

1. Ambient temperature is limited to 150°F (65°C) maximum. Contact factory for ambient temperature > 150°F (65°C)

Table 5 MT3750C Temperature Ratings for Elastomer Materials

Elastomer Materials	Minimum Temperature		Maximum Temperature	
	°F	°C	°F	°C
Kalrez 4079	-58	-50	400	204
Viton A	5	-15	400	204
Teflon PTFE	-58	-50	400	204
Buna	-22	-30	250	120
Ethylene Propylene	-58	-50	250	120

Table 6 Certifications - MT3750C (Reference Tables 7, 8 & 9 for Certifications with Transmitter, Reed Switch Alarm and Inductive Alarm)

Mark	Certification	Applicable Standard	Details
CE	EMC Directive 2004/108/EC	EN:61326-1:2006	EMC
	All Canadian Provinces - CRN	ASME B31.3	
PA	Pattern Approval Certificate for Measuring Instruments- Peoples Republic of China		2012-F233

Product Dimensions - Threaded Connections with Indicator Only

MT3750 STANDARD CONNECTION

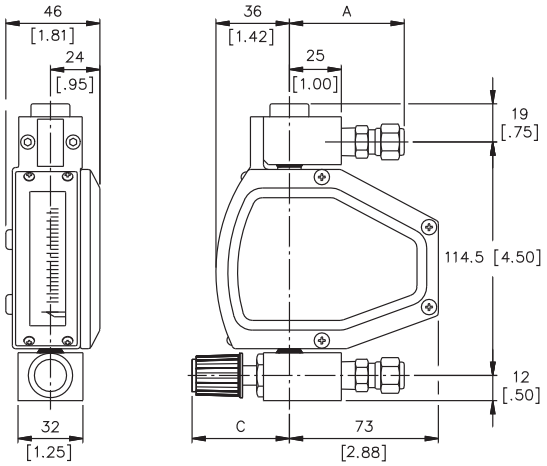

MT3750 WITH 8800 SERIES **MT3750 WITH 8900 SERIES**

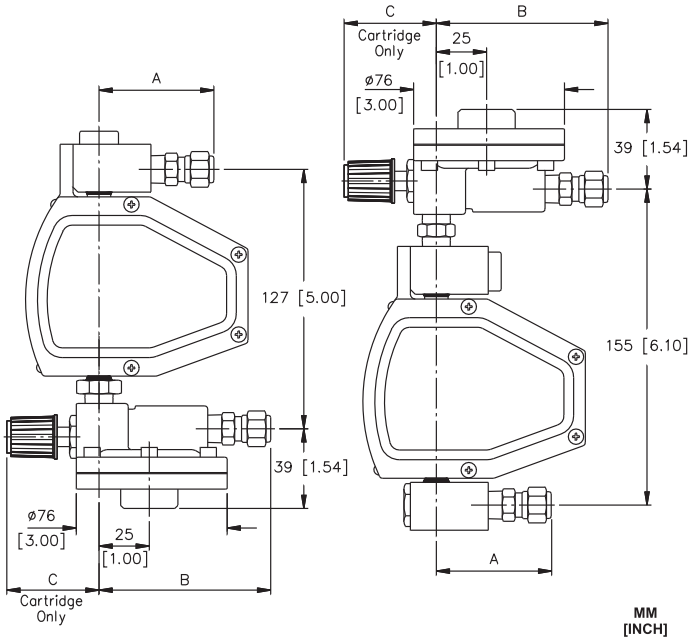

	1/4" NPT–F	1/4" Rc–F	1/4" TB CPR.	6mm TB CPR.	1/2" NPT–F	3/4" NPT–F	DIM. C valve open
DIM. A	25 [1,00]	52 [2,05]	56 [2,20]	56 [2,20]	71 [2.79]	73 [2.87]	Cartridge II 46 [1,81]
DIM. B	53 [2,09]	80 [3,15]	84 [3,30]	84 [3,30]	99 [3.89]	101 [3.97]	N.R.S. 59 [2,32]

*Flow controller bracket not shown. Contact Brooks Instrument for drawing of flow controller with bracket.

Product Dimensions - Threaded Connections w/Transmitter or Inductive Alarm

MT3750 STANDARD CONNECTION

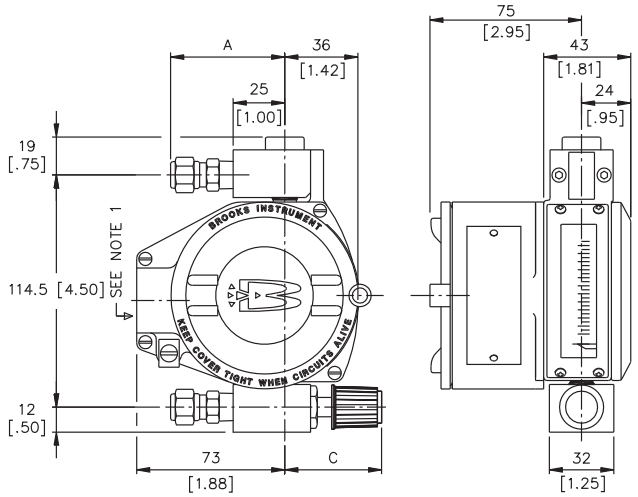

NOTE 1:
CONDUIT CONNECTION M20x1,5 ISO
OR ½"NPT F

MT3750 WITH 8800 SERIES

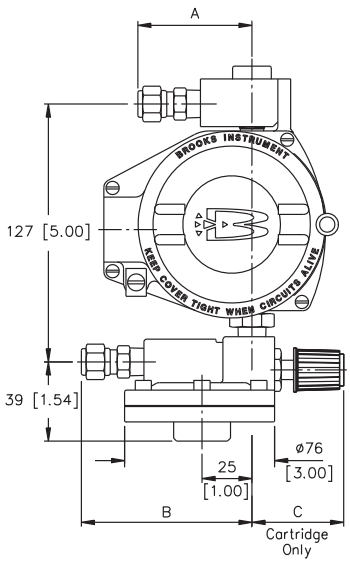

MT3750 WITH 8900 SERIES

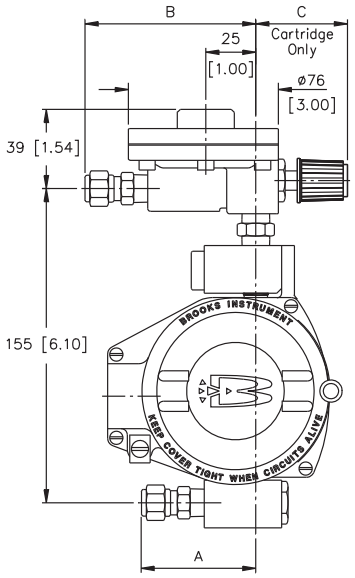

MM
[INCH]

	1/4" NPT-F	1/4" Rc-F	1/4" TB CPR.	6mm TB CPR.	1/2" NPT-F	3/4" NPT-F	DIM. C valve open	Dimension D
DIM. A	25 [1,00]	52 [2,05]	56 [2,20]	56 [2,20]	71 [2.79]	73 [2.87]	Cartridge II 46 [1,81]	8800 series 125 [4,92]
DIM. B	53 [2,09]	80 [3,15]	84 [3,30]	84 [3,30]	99 [3.89]	101 [3.97]	N.R.S. 59 [2,32]	8900 series 150 [5,90]

*Flow controller bracket not shown. Contact Brooks Instrument for drawing of flow controller with bracket.

Product Dimensions - Threaded Connections w/Reed Switch Alarm

MT3750 STANDARD CONNECTION

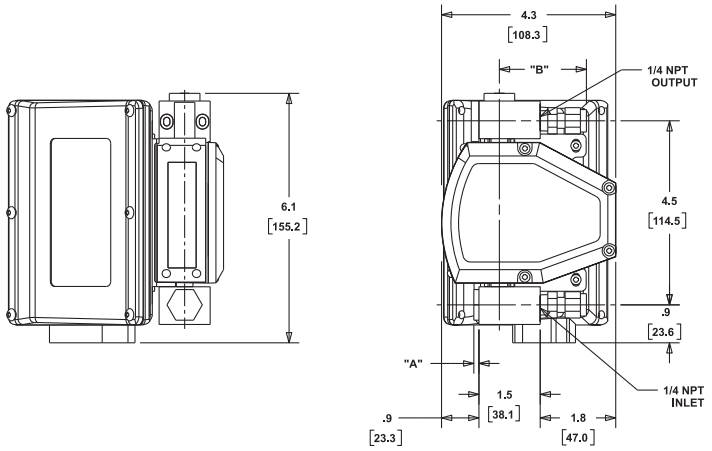

MT3750 WITH 8800 SERIES

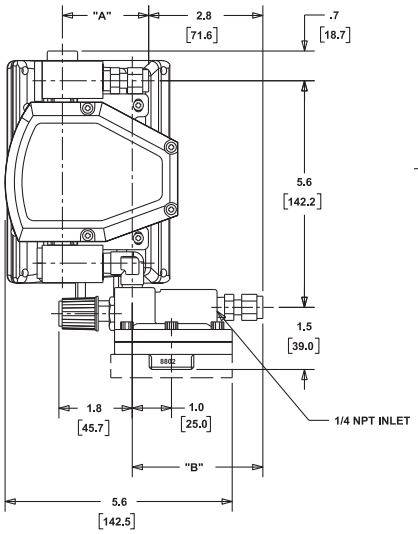

MT3750 WITH 8900 SERIES

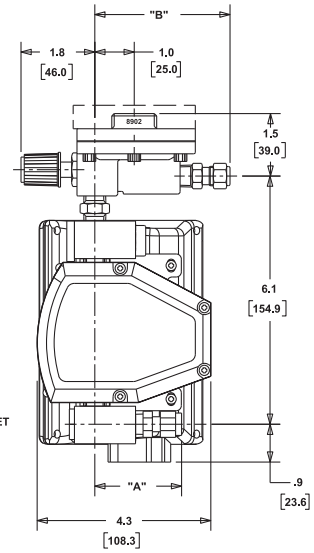

MM
[INCH]

	1/4"NPT-F	1/4" Rc-F	1/4" TB CMPR.	1/2" NPT-F	3/4" NPT-F	6mm TB CMPRS.	DIM C Valve open	
DIM A	1.0 [25.0]	2.0 [50.8]	2.2 [55.9]	2.8 [71.1]	2.9 [73.7]	2.2 [55.9]	CARTRIDGE 1.3 [3.3]	PLUG .1 [3.0]
DIM B	2.1 [53.3]	3.2 [81.3]	3.3 [83.8]	3.9 [99.1]	4.0 [101.6]	3.3 [83.8]	NRS 2.2 [55.9]	

*Flow controller bracket not shown. Contact Brooks Instrument for drawing of flow controller with bracket.

Product Specifications - Transmitter

Description - Transmitter

The transmitter provides accurate magnet angle detection and conversion to a 4 - 20 mA industry standard output signal, based on the position of a float assembly in the flowmeter. This rugged, compact, microprocessor-driven device is capable of providing accurate flow information to your external support systems. The patented magnetic sensor with automatic gain control enables an extremely high dynamic capture range without sacrificing accuracy.

Reference Transmitter Wiring Diagram on following page.

Table 7 Certifications - MT3750C with Transmitter

Flameproof/ Explosion-proof

Mark	Agency	Certification	Applicable Standard	Details
	ATEX	Zone 1, Zone 21 II 2 G Ex d IIC T6 II 2 D Ex tD A 21 IP66 T 85°C	EN 60079-0:2006 EN 60079-1:2004 EN 61241-0:2006 EN 61241:2004	KEMA 01ATEX2174
	IECEx	Zone 1 EX d IIC T6	IEC 60079-0:2004 IEC 60079-1:2003	KEM 06.0049
	UL	Class I, Div.1, Groups A, B, C, and D,T6 Class II, Div.1, Groups E, F, and G Class I, Zone 1 AEx d IIC T6 Ex d IIC T6	UL & CSA Standards	File E73889
	NEPSI (China)	Ex d IIC T6 Gb	GB3836.1-2010 GB3836.2-2010	GYJ11.1638X

Intrinsically Safe

	ATEX	Zone 1, Zone 21 II 2 G Ex ia IIC T6 II 2 D Ex iaD 21 IP66/IP67 T70°C II 2 D Ex tD A21 IP66/IP67 T70°C	EN 60079-0:2006 EN 60079-11:2007 EN 61241-0:2006 EN 61241-11:2006	KEMA 01ATEX1033
	IECEx	Zone 1 EX ia IIC T6	IEC 60079-0:2004 IEC 60079-11:1999	KEM 06.0037
	CSA	Class I, II, III, Div.1, Groups A, thru G, T6 Class I, Zone 1 AEx ia IIC T6 Ex ia IIC T6	UL & CSA Standards	1292059
	NEPSI (China)	Ex ia IIC T6 Gb Ex iaD 21 T70°C	GB3836.1/4-2010, IEC 61241-0:2004, GB 12476.4-2010	GYJ11.1637

Non-Incendive

	IECEx	Zone 2 Ex nA II T6	IEC 60079-0:2004 IEC 60079-15:2005	KEM 06.0037
	CSA	Class I, Div.2, Grps A, B, C, and D; Class II Grps F and G, T6 Class I, Zone 2 AEx nA II T6 Ex nA II T6	UL & CSA Standards	1292059

Flameproof, Intrinsically Safe & Non-Incendive

		Custom Union including Russia “On safety of the equipment operating under excessive pressure”	TR CU 032/2013	TC N RU Д-U.АУ04.В.05988
		Custom Union including Russia "On safety of the equipment for work in explosive environments"	TR CU 012/2011 (TR CU Ex)	RU C-HU.ГБ08.В.00741

Product Specifications - Reed Switch Alarm/Limit Switches

Description - Reed Switch Alarm

Two reed switches are installed in the alarm housing to provide signaling or switching functions when a preset flow value has been reached. The reed switches provide high, low or dual setpoints and latched output over the full range. The switches are normally adjusted to the desired flow range in the factory. Modifications to the switch settings can be made in the field. Minimum setting distance between two switches is approximately 40% of the scale. (Reference Reed Switch Wiring Diagram below)

Data Reed Switch

Maximum Voltage*	175 Vdc, 124 Vac
Maximum Current*	250 mA
Maximum Contact Rating*	3 Watts

(*Maximum Switch Specifications)

Electrical Classification

Non Incendive:

Maximum Voltage	30 Vdc
Maximum Current	100 mA
Maximum Contact Rating	3 Watts

Table 8 Certifications - MT3750C With Reed Switch Alarm

Mark	Agency	Certification	Applicable Standard	Details
C US	CSA	Intrinsically Safe Class I, Div 1, Groups A, B, C and D; Class II, Groups E, F and G; Class III; Encl Type 4X	UL & CSA Standards	1788748
		Non-Incendive Class I, Div 2, Groups A, B, C and D; Class II, Groups E, F and G; Class III; Encl Type 4X	UL & CSA Standards	1788748

Intrinsically Safe: Entity Parameters, Vmax=30Vdc, Imax=100mA, Ci=0, Li=0

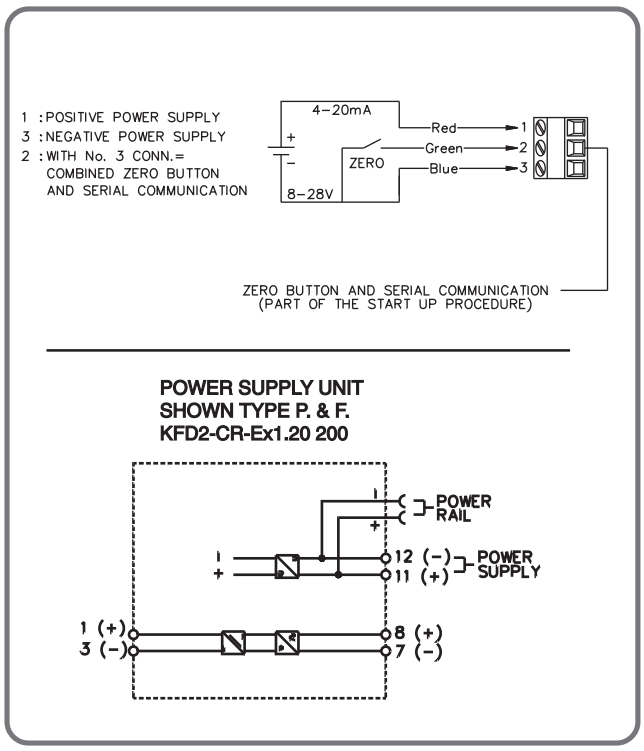

Transmitter Wiring Diagram

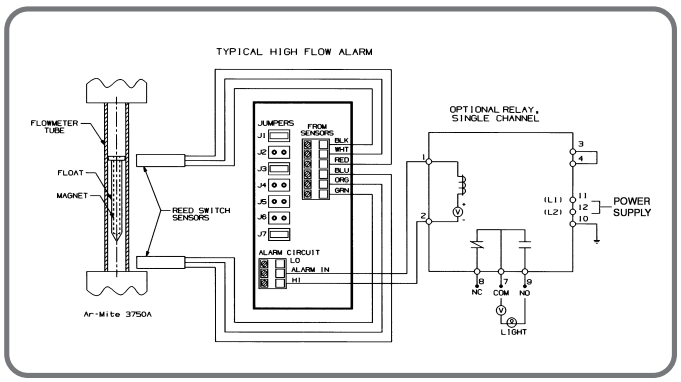

Reed Switch Wiring Diagram

Product Specifications - Limit Switches/Inductive Alarm Switch

Limit Switches - Inductive Alarm Switch

One or two electronic limit switches type SJ2-N can be installed in the indicator housing to allow initiation of signaling or switching functions on a preset flow value being reached. The SJ2-N limit switch operates as a slot initiator that is inductively actuated by a cam mounted to the pointer. Any flow value can be used for setting the limit value by sliding the switch along the slot in the mounting plate for the initiators. Minimum setting distance between two limit switches is approximately 50 % of the scale range.

Power supply	**8 Vdc (Max. 15.5 Vdc)**
Current consumption	active area clear: > 3 mA
Current consumption	active area obscured: < 1 mA
Self inductance	29 µH
Self capacitance	20 nF
Max Temp	158°F (70°C)

The flow valve can be used for setting the limit value by sliding the switch along the slot in the mounting plate for the initiators. Minimum setting distance between two limit switches is approximately 50% of the scale range.

Table 9 Certifications - MT3750C With Inductive Alarm

Intrinsically Safe

Mark	Agency	Certification	Applicable Standard	Details
Ex	ATEX	Zone 1, Zone 21 II 2 G Ex ia IIC T6 II 2 D Ex ia D 21 IP65 T75°C	EN 60079-0:2006 EN 60079-11:2007 EN 61241-0:2006 EN 61241-11:2006	KEMA 02ATEX1126
	IECEx	Zone 1, Zone 21 Ex ia IIC T6 Gb Ex ia IIIC T 75°C Db IP65	IEC 60079-0:2007-10 IEC 60079-11:2006 IEC 61241-11:2005	IECEx KEM 09.0046
C US	CSA	Class I, II, III, Div.1, Groups A thru G, T6 Class I, Zone 0, Zone 1 AEx ia IIC, T6 Ex ia IIC T6	UL & CSA Standards	1379260
Ex NEPSI	NEPSI (China)	Ex ia IIC T6 Gb	GB3836.1-2010 GB3836.4-2010	GYJ11.1639

Non-Incendive

C US	CSA	Class I, II, III, Div. 2, Groups A thru G, T6 Class I, Zone 2 AEx nA II, T6 Ex nA II T6	UL & CSA Standards	1379260
Ex NEPSI	NEPSI (China)	Ex nA IIC T6 Gc	GB3836.1:2010; GB3836.8:2003	GYJ13.1315

Intrinsically Safe & Non-Incendive

EAC		Custom Union including Russia “On safety of the equipment operating under excessive pressure”	TR CU 032/2013	TC N RU Д-U.AУ04.B.05988
EAC		Custom Union including Russia "On safety of the equipment for work in explosive environments"	TR CU 012/2011 (TR CU Ex)	RU C-HU.ГБ08.B.00741

Model Code

Code Description	Code Option	Option Description
I. Base Model Number	**3750C**	55 mm, Armored Purge Flowmeter
II. Material Specification	**1**	316L Stn. Stl. & CRN Certification
	2	316L Stn. Stl., CRN Certification & Certified Material to EN 2.2
	3	316 Stn. Stl., CRN Certification & Certified Material to EN 3.1
	4	316L Stn. Stl., CRN Certification & Section IX Welding
	5	316L Stn. Stl., CRN Certification & Certified Material to EN 2.2/Section IX Welding
	6	316L Stn. Stl., CRN Certification & Certified Material to EN 3.1/Section IX Welding
	A	316L Stn. Stl.
	B	316L Stn. Stl., Certified Material to EN 2.2
	C	316L Stn. Stl., Certified material to EN 3.1
	D	316L Stn. Stl. with Section IX Welding
	E	316L Stn. Stl., Certified Material to EN 2.2/Section IX Welding
	F	316L Stn. Stl., Certified Material to EN 3.1/Section IX Welding
	G	Monel K500
	H	Monel K500 Certified Material to EN 3.1

		316L Tube	Monel K 500 Tube
III. Meter Size	**0**	Size 0 - Titanium Float	Size 0 - Titanium Float
	1	Size 1 - 316L Stn. Stl. Float	Size 1 - Monel K 500 Float
	2	Size 2 - 316L Stn. Stl. Float	Size 2 - Monel K 500 Float
	3	Size 3 - 316L Stn. Stl. Float	Size 3 - Monel K 500 Float
	4	Size 4 - 316L Stn. Stl. Float	Size 4 - Monel K 500 Float
	5	Size 5 - 316L Stn. Stl. Float	Size 5 - Monel K 500 Float
	6	Size 6 - 316L Stn. Stl. Float	Size 6 - Monel K 500 Float

		Construction	Seals
IV. Construction/Seals	**A**	Standard Design	Viton O-rings
	B	Standard Design	Teflon O-rings (No Valve Only)
	C	Standard Design	Buna O-rings
	D	Standard Design	Kalrez O-rings (With/Without Valve)
	E	Standard Design	EPM O-rings
	F	Standard Design	Teflon in Meter and Kalrez in Valve
	G	All Welded/High Pressure	No Elastomer - No Valve Cavity

V. Connection Size and Type	**1**	1/4″ NPT (F) - Integral
	2	1/4″ Tube Compression - With Adapter
	3	6 mm Tube Compression - With Adapter
	4	1/4″ Rc (F) - With Adapter
	5	1/2″ NPT (F) With Adapter
	6	3/4″ NPT (F) - With Adapter
VI. Connection Orientation	**1**	Horizontal Inlet and Outlet (Threaded Connections Only)
VII. Valve Configuration	**A**	No Valve (Standard Fitting with Plug)
	B	Low Flow Valve on Inlet - Typical for Sizes 0, 1, 2
	C	Medium Flow Valve on Inlet - Typical for Sizes 3 & 4
	D	High Flow Valve on Inlet - Typical for Sizes 5 & 6
	E	No Valve Cavity - All Welded / High Pressure Only
	K	NRS Valve - Size 3 on Inlet - Typical for Sizes 0 & 1
	L	NRS Valve - Size 4 on Inlet - Typical for Size 2
	M	NRS Valve - Size 5 on Inlet - Typical for Size 3
	N	NRS Valve - Size 6 on Inlet - Typical for Sizes 4 & 5
	P	NRS Valve - Size 7 on Inlet - Typical for Size 6
	T	Mounted to 316L SS 8802 Flow Controller with Viton Diaphragm
	U	Mounted to 316L SS 8805 Flow Controller with Teflon Diaphragm
	V	Mounted to 316L SS 8902 Flow Controller with Viton Diaphragm
	W	Mounted to 316L SS 8905 Flow Controller with Teflon Diaphragm
	1	Mounted to 316L SS 8802 Flow Controller with Teflon Diaphragm
	3	Mounted to 316L SS 8902 Flow Controller with Teflon Diaphragm

		Accuracy	Inscription	Fluid
VIII. Accuracy/Inscription/Fluid	**9**	N/A	No Scale	N/A
	A	N/A	Blank Scale	N/A
	B	4 VDI / 5% FS	% Scale	Liquid
	C	4 VDI / 5% FS	Direct Reading	Liquid
	D	4 VDI / 5% FS	% Scale	Gas
	E	4 VDI / 5% FS	Direct Reading	Gas
	F	4 VDI / 5% FS	% Scale	Liquid - High Viscosity
	G	4 VDI / 5% FS	Direct Reading	Liquid - High Viscosity
	H	2.5 VDI / 3% FS	% Scale	Liquid
	J	2.5 VDI / 3% FS	Direct Reading	Liquid
	K	2.5 VDI / 3% FS	% Scale	Gas
	L	2.5 VDI / 3% FS	Direct Reading	Gas
	M	2.5 VDI / 3% FS	% Scale	Liquid - High Viscosity
	N	2.5 VDI / 3% FS	Direct Reading	Liquid - High Viscosity

(Model Code continued on next page)

Model Code (continued)

Code Description	Code Option	Option Description
IX. Electrical Output	**A**	None
	B	Reed Switch Alarm, Meter Mounted
	E	Single Inductive Alarm with M20 x 1.5 Electrical Connection
	F	Single Inductive Alarm with 1/2″ NPT (F) Electrical Connection
	G	Double Inductive Alarm with M20 x 1.5 Electrical Connection
	H	Double Inductive Alarm with 1/2″ NPT (F) Electrical Connection
	J	Mat Transmitter with M20 x 1.5 Electrical Connection
	K	Mat Transmitter with 1/2″ NPT (F) Electrical Connection
X. Alarm Relay/ Transmitter Power Supply	**A**	None
	B	Power Supply 24 Vdc with IS Barrier
	C	Power Supply 120 Vac with IS Barrier
	D	Power Supply 240 Vac with IS Barrier
	E	24 Vdc 1 Channel
	F	24 Vdc 2 Channel
	G	120 Vac 1 Channel
	H	120 Vac 2 Channel
	J	240 Vac 1 Channel
	K	240 Vac 2 Channel
XI. Certifications/Approvals	**A**	None
	C	Zone 1, Intrinsically Safe CENELEC - ATEX
	D	Zone 1, Flame-proof CENELEC - ATEX
	E	Division 2/Zone 2, Non-incendive CSA - USA and Canada (Transmitter 1/2″ NPT & Alarms)
	F	Division 1/Zone 1, Intrinsically Safe CSA - USA and Canada (Transmitter 1/2″ NPT & Alarms)
	G	Division 1/Zone 1, Explosion-proof/Flame-proof UL Listed - USA and Canada
	H	Zone 1 Intrinsically Safe NEPSI (China) (1/2″ NPT and M20 Elec. Conn.)
	J	Zone 2 Non-sparking NEPSI (China) (1/2″ NPT and M20 Elec. Conn.) - Alarm Only
	K	Zone 1 Flame-proof NEPSI - Transmitter Only (China) (M20 Elec. Conn. Only)
	L	Zone 1 Intrinsically Safe IECEx (World) (1/2″ NPT and M20 Elec. Conn.)
	M	Zone 2 Non-sparking IECEx (World) - Transmitter Only (1/2″ NPT and M20 Elec. Conn.)
	N	Zone 1 Flame-proof IECEx (World) - Transmitter Only (M20 Elec. Conn.)
	P	TR CU Ex Zone 2, Non-incendive/non-sparking (Customs Union including Russia) - Transmitter 1/2″ NPT & Alarm
	R	TR CU Ex Zone 1, Flame-proof XP - IIC (Customs Union including Russia)
	S	TR CU Indicator only (Customs Union including Russia)
	T	Zone 1 Flame-proof - KOSHA (Korea)
	U	Zone 1/Zone 2 Non-Electrical ATEX
XII. Material Inspection	**A**	None
	1	Material Certificate-3.1 & NACE MR0175 MR0103 Certificate - 2.1 (316L SS Construction Only)
	2	Liquid Dye Penetrant Test Report - 2.1 (Welds Only) - (316L SS Construction Only)
	3	Certified According to NACE MR0175 MR0103& Liquid Penetrant
	4	International Calibration Certificate Includes Scale Check
	5	ICC & NACE MR0175 MR0103
	6	Positive Material Identification Report - 2.1
	7	PMI & LDP
	8	ICC & PMI
	9	ICC, PMI & LDP
	B	LDP, ICC
	C	LDP, NACE MR0175 MR0103
	D	LDP, NACE MR0175 MR0103, PMI
	E	LDP, NACE MR0175 MR0103, PMI, ICC
	F	ICC, PMI, NACE
	H	LDP, ICC, NACE
XIII. Accessory	**A**	None
	B	Flush Panel Mounting (Indicator and Threaded Connections Only)
	C	No Brooks Identification (Indicator Only)
	D	Degrease for Oxygen Service
	E	Special In-House Cleaning
	S	Flush Panel Mounting & Degrease for Oxygen Service (Same as Option B)
	T	Flush Panel Mounting & Special Cleaning (Same as Option B)
XIV. Accessory Group 2	**0**	None
	B	Bracket, FCA, Standard
	C	Bracket, FCA, Stainless Steel
	D	Dual Scale
	E	Dual Scale and Standard Bracket
	F	Dual Scale and SS Bracket

Sample Standard Model Code

I	II	III	IV	V	VI	VII	VIII	IX	X	XI	XII	XIII	XIV
3750C	A	2	A	1	1	A	B	A	A	A	A	A	0

Brooks Service and Support

Brooks is committed to assuring all of our customers receive the ideal flow solution for their application, along with outstanding service and support to back it up. We operate first class repair facilities located around the world to provide rapid response and support. Each location utilizes primary standard calibration equipment to ensure accuracy and reliability for repairs and recalibration and is certified by our local Weights and Measures Authorities and traceable to the relevant International Standards.

Visit www.BrooksInstrument.com to locate the service location nearest to you.

START-UP SERVICE AND IN-SITU CALIBRATION

Brooks Instrument can provide start-up service prior to operation when required. For some process applications, where ISO-9001 Quality Certification is important, it is mandatory to verify and/or (re)calibrate the products periodically. In many cases this service can be provided under in-situ conditions, and the results will be traceable to the relevant international quality standards.

CUSTOMER SEMINARS AND TRAINING

Brooks Instrument can provide customer seminars and dedicated training to engineers, end users, and maintenance persons.

Please contact your nearest sales representative for more details.

Due to Brooks Instrument's commitment to continuous improvement of our products, all specifications are subject to change without notice.

TRADEMARKS
Brooks, Ar-Mite & NRS ..... Brooks Instrument, LLC
All other trademarks are the property of their respective owners.

Global Headquarters
Brooks Instrument
407 West Vine Street
Hatfield, PA
19440-0903 USA

Toll-Free (USA): 888-554-FLOW
T: 215-362-3500
F: 215-362-3745
BrooksAM@BrooksInstrument.com

A list of all Brooks Instrument locations and contact details can be found at www.BrooksInstrument.com

©Copyright 2017 Brooks Instrument, LLC All rights reserved. Printed in U.S.A.